HAL
open science

A Prototype of High Accuracy Telemeter for Long-Range Application

Joffray Guillory, Daniel Truong, Christophe Alexandre, Jean-Pierre Waller

To cite this version:

Joffray Guillory, Daniel Truong, Christophe Alexandre, Jean-Pierre Waller. A Prototype of High Accuracy Telemeter for Long-Range Application. 2018 Conference on Precision Electromagnetic Measurements (CPEM 2018), Jul 2018, Paris, France. pp.1-2, 10.1109/CPEM.2018.8501040 . hal-02465301

HAL Id: hal-02465301

https://cnam.hal.science/hal-02465301v1

Submitted on 4 Jan 2023

HAL is a multi-disciplinary open access archive for the deposit and dissemination of scientific research documents, whether they are published or not. The documents may come from teaching and research institutions in France or abroad, or from public or private research centers.

L'archive ouverte pluridisciplinaire **HAL**, est destinée au dépôt et à la diffusion de documents scientifiques de niveau recherche, publiés ou non, émanant des établissements d'enseignement et de recherche français ou étrangers, des laboratoires publics ou privés.

A prototype of high accuracy telemeter for long-range application

Joffray Guillory*, Daniel Truong*, Christophe Alexandre† and Jean-Pierre Wallerand*

* Laboratoire Commun de Métrologie LNE-Cnam, LNE, 1 rue Gaston Boissier, 75015 Paris, France
joffray.guillory@cnam.fr

† Centre d'Études et de Recherche en Informatique et Communications, le Cnam, 292 rue Sᵗ-Martin, 75003 Paris, France

***Abstract* - This paper presents a long-range absolute distance meter working at 1550 nm. This instrument, based on off-the-shelf fiber-optic components from the telecommunications industry, has been evaluated in term of performances thanks to measurement campaigns conducted in the field and to comparisons with interferometric benches. We describe the principle of operation of this prototype and present its performances: resolution, accuracy and range of operation.**

***Index Terms* - Laser diode, Intensity modulation, Phase measurement, Distance measurement, Crosstalk, Geodesy.**

I. Introduction

Accurate long-distance measurements are essential for many applications such as the monitoring of large scale facilities (particle accelerators) or of large structures (dams). However, millimetric uncertainty over 5 or 10 kilometers is still a challenge, either with Global Navigation Satellite Systems (GNSS) or with electro-optical techniques. We present in this paper an all-fibered optical absolute distance meter that we have developed at 1550 nm by using off-the-shelf components. This prototype has demonstrated an accuracy of 2 µm up to 100 m and its range of operation was tested up to 5.4 km.

II. Principle of Operation

The telemeter is based on the measurement of the phase shift of a Radio Frequency (RF) modulation applied to the intensity of an optical beam propagating in air.

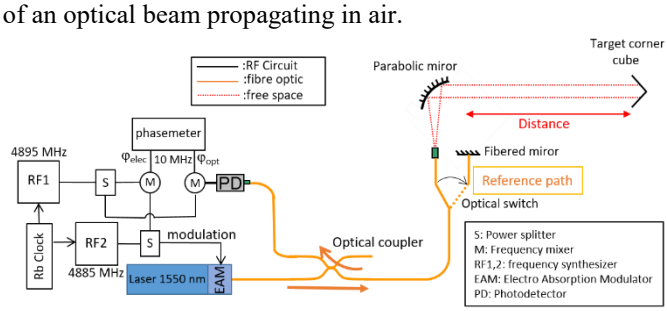

Figure 1: schematic diagram of the telemeter

As depicted in Fig. 1, a 1550 nm laser diode with a built-in Electro Absorption Modulator (EAM) has been chosen to generate a modulated light beam. The RF carrier used for this modulation around 5 GHz also serves as a phase of reference, φ_{elect}, for the phase shift measurement.

The modulated light beam is collimated by an off-axis parabolic mirror for a free-space propagation. After reflection on the distant corner cube, the beam is refocused into the singlemode fiber, then the optical signal is converted in an electrical one by a PIN photodiode. The received signal is used as measurement phase, φ_{opt}. The choice of the photodetector is essential to avoid amplitude to phase coupling [1].

The difference between the two phase states, Φ, is linked to the distance L travelled by the optical beam by the relation:

$$L = \frac{1}{2} \times \left(\frac{\phi}{2\pi} + k \right) \times \frac{c}{n \times f_{RF}} \qquad (1)$$

where c is the speed of light in vacuum, f_{RF} the frequency of the modulation, k the number of time that the phase has rotated of 2π during the propagation, and n the refractive index of the medium travelled by the beam.

In practice, the distance is measured between the position of the distant hollow corner cube and an internal fibered mirror that is periodically illuminated thanks to an optical switch. This internal mirror enables us to remove any drifts of the RF phase that occurs upstream from the optical switch.

The phase difference between the measurement and reference signal is measured at 10.75 MHz after a down-conversion of the RF signals. To this end, a homemade phasemeter based on a Field-Programmable Gate Array (FPGA) has been designed.

III. Resolution and Range of the Telemeter

A. Resolution

At short range, typically some tens of centimeters, in a quiet environment, the standard deviation of a set of data is around 800 nm for 10 ms of integration time for each point (Fig. 2).

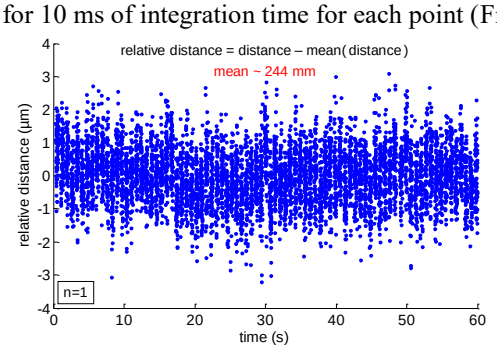

Figure 2: short range resolution with standard deviation of 800 nm.

For longer range, the standard deviation of a measurement depends on the atmospheric conditions. In any case, we have never observed standard deviations larger than 40 µm, even in

978-1-5386-0974-3/18/$31.00 ©2018 IEEE

very harsh weather conditions and over several kilometers of measurement.

B. Range of operation

The maximum range we have tested is 5.4 km. Fig. 3 depicts a measurement over such a distance, with displacement steps of 100 µm applied to the distant corner cube. At this distance, over an urban area, the resolution was around 30 µm. A long-term drift can be observed on the raw dataset as no air index correction is applied, however, we can easily distinguish the distance variations. Between each step, we went back to the zero position to estimate this drift and thus apply a polynomial correction that compensates for the air index fluctuations.

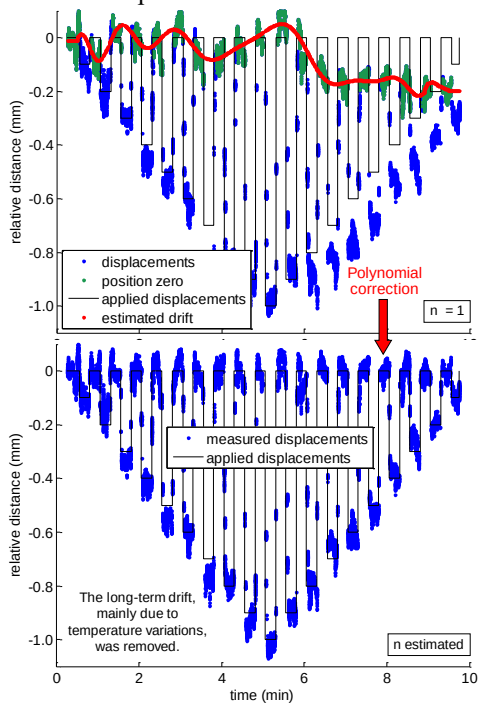

Figure 3: measurement of steps of 100 µm of a corner cube located at 5.4 km away from the telemeter.

V. ACCURACY OF THE TELEMETER

In addition to an incorrect evaluation of the atmospheric parameters (*n* index in formula 1), errors can be produces by the instrument itself. For instance, a wrong estimate of the RF carrier value would result in a scale error. To overcome this problem, all the frequencies of the setup are locked on a miniature Rubidium (Rb) clock. This ensures a value better than 10^{-9}, well enough for our application. It is more difficult to identify errors due to crosstalks, i.e. the addition of spurious signals at the same frequency as the measurement signal. Such an unwanted signal induces an error in the measured phase that evolves periodically with the measured distance. This is usually called the "non-linearity" of the instrument. To quantify these errors, the distance measured by our telemeter has been compared to the one measured by an interferometer.

For the non-linearity, the comparison has been done with displacement steps of 5 mm, around 10 times less than the expected period of potential non linearities. No cyclic error has been detected at the scale of 2-3 µm (peak-to-peak error).

For the scale error, the comparison has been done over a 50 m long interferometric bench with a folded telemeter beam to double the distance covered. Fig. 4 shows the result for two different alignments of the bench, either with a variation of the RF power detected along the bench of 2 dB (day 1) or 10 dB (day 2). The error corresponds to the difference between the two measured distances, i.e. telemeter and interferometer. No scale error has been detected at the scale of 2.2 µm (standard deviation on the error).

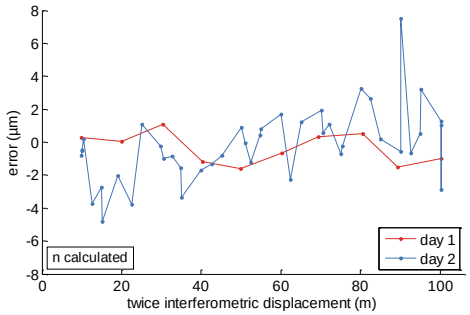

Figure 4: comparison with an interferometer over a 50 m long bench.

VI. CONCLUSION

The telemeter that we have developed, sufficiently transportable to enable easy measurements in the field, has demonstrated an instrumental standard uncertainty of 2-3 µm up to 100 m (k=1), i.e. with no periodic or scale error at this level. It can also measure beyond this distance: its range of operation is at least 5.4 km, with a resolution below 40 µm in all the cases, but for long-range the measurement accuracy is still limited by the determination of the atmospheric parameters.

We are currently developing a two-wavelength system based on the same principle that should enable distance measurements at the millimeter level without determination of temperature and atmospheric pressure, whatever the measured distance.

ACKNOWLEDGEMENT

This work was funded in part within the European Metrology Research Programme (EMRP) as JRPs SIB60 Surveying and IND53 Luminar. We thank J. Cali and S. Durand from École Supérieure des Géomètres et Topographes (ESGT) for their advices and the availability of their interferometric bench.

REFERENCES

[1] J. Guillory, J. Garcia-Marquez, C. Alexandre, D. Truong and J-P. Wallerand, "Characterization and reduction of the amplitude-to-phase conversion effects in telemetry". *Measurement Science and Technology*, vol. 26, no. 8, p. 084006, July 2015.